NOTRE DAME UNIVERSITY
BANGLADESH

EEE Lab Report-04

Course Title: Electrical Circuit Analysis Lab

Course Code: EEE-2108

Experiment No: 04

Name of the Experiment: Design of Clampers

Date of Experiment: 17-08-23

Date of Submission: 24-08-23

Submitted by:

Group: E

Name: Istiak Alam

ID: 0692230005101005

Batch: CSE-20

Submitted To:

Dhiman Roy
Lecturer, NDUB

Experiment No: 04

Name of experiment: Design of Clampers.

Theory: A clamper is a network constructed of a diode, a resistor & a capacitor that shifts a waveform to a different dc level without changing the appearance of the applied signal.

Additional shifts can also be obtained by introducing a dc supply to the basic structure. The chosen resistor and capacitor of the network must be choosen such that the time constant determined by $\tau = RC$ is sufficiently large to ensure that the voltage across the capacitor does not discharge significantly during the interval the diode is nonconducting.

Clamping networks have a capacitor connected directly from input to output with a resistive element in parallel with the output signal. The diode is also in parallel with

the output signal but may or not have a series dc supply as an added element.

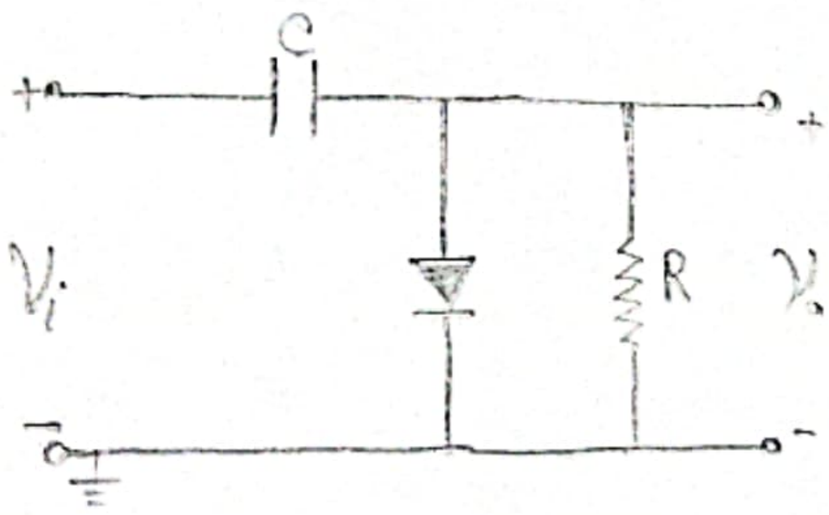

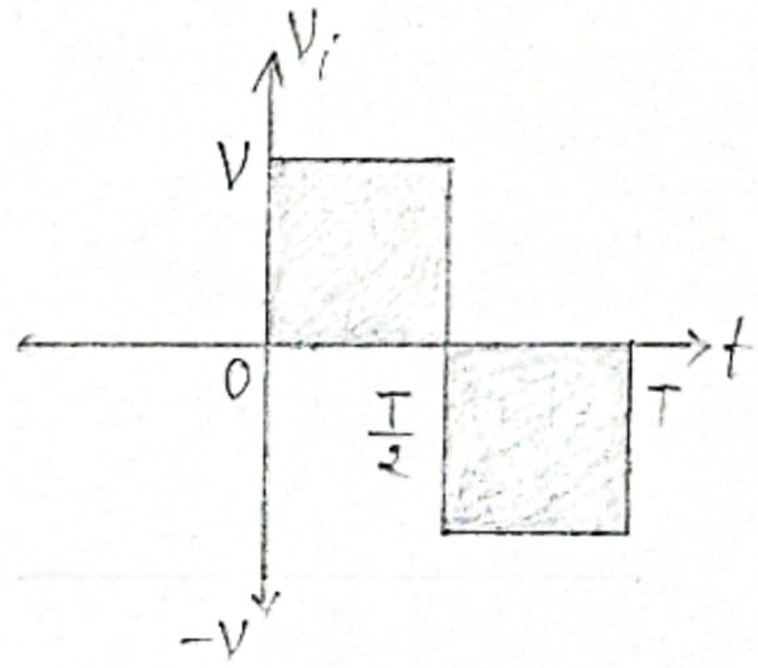

Fig: 4.1: Simple Clamper

Equipments & Components:

1. p-n junction diode — 1 piece
2. Resistor — 100Ω - 1 piece
3. Capacitor — 0.1μF - 1 piece
4. Signal genarator
5. Trainer Board
6. DC power supply
7. Digital Storage Oscilloscope.
8. Digital Multimeter
9. Wire & jumpers.

Procedures for Designing a Biased Clamper Network:

(i) Make the following observations of the output wave shape shown in Fig-4.2. But at the first we have to construct the circuit shown in Fig-4.3 & Fig 4.4.

(ii) Whether the output waveshape is shifted upward or downward with respect to the input wave shape:

(iii) Smaller voltage level is found during "ON" state of the diode & the greater voltage level is found during "OFF" state.

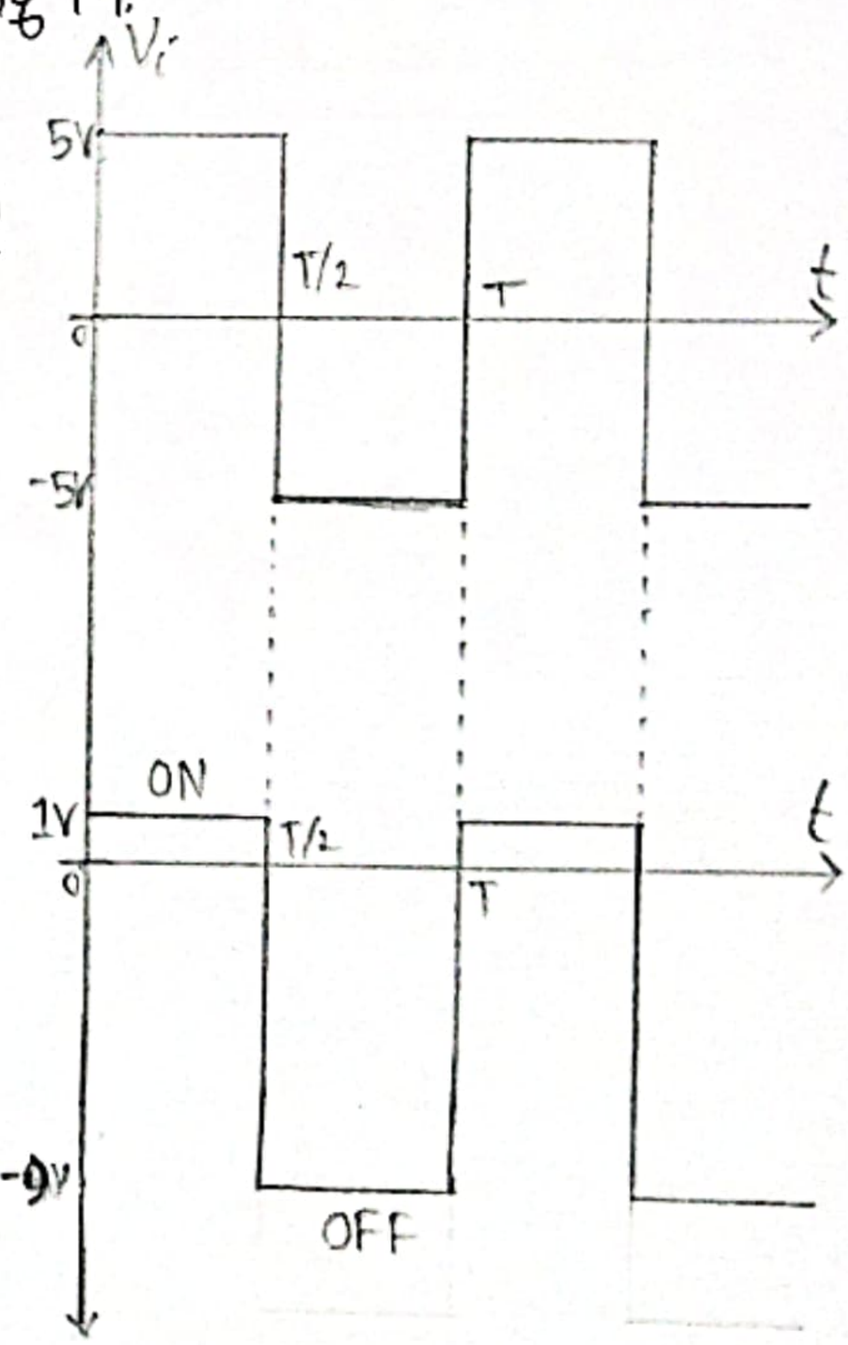

Fig 4.2

(iv) Peak to peak input voltage is equal to peak to peak output voltage in a clamper network.

Now we observe the output waveshape in fig 4.3.

Clamper Circuit & Graph:

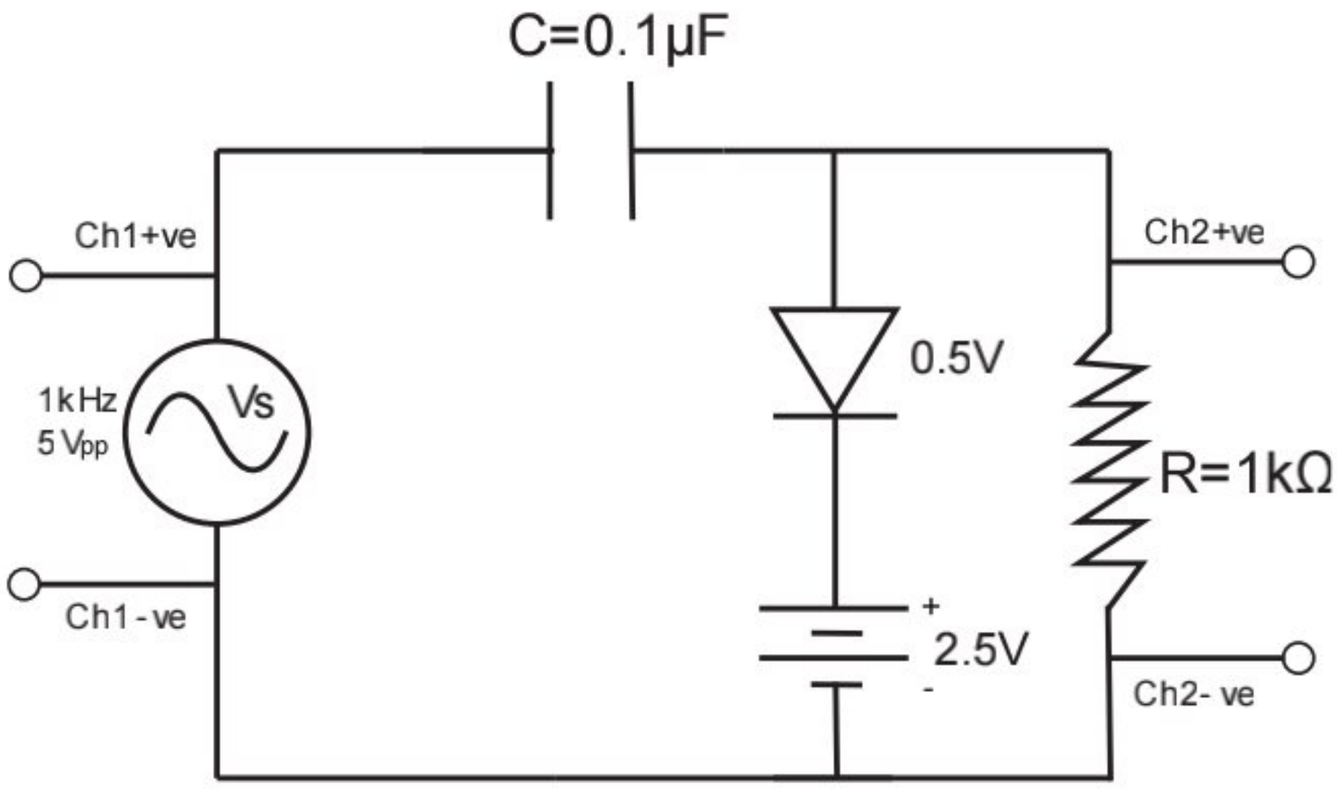

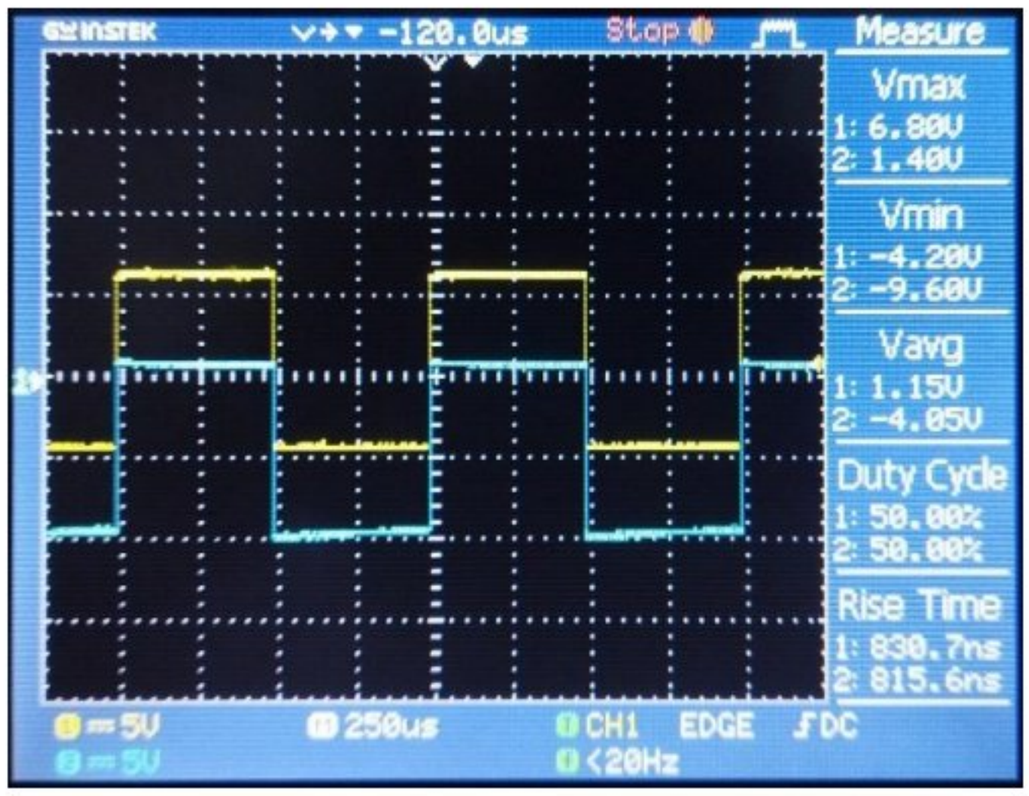

Fig 4.3: Biased Clamper Circuit-1 & Output Wave shape (Downward Shift)

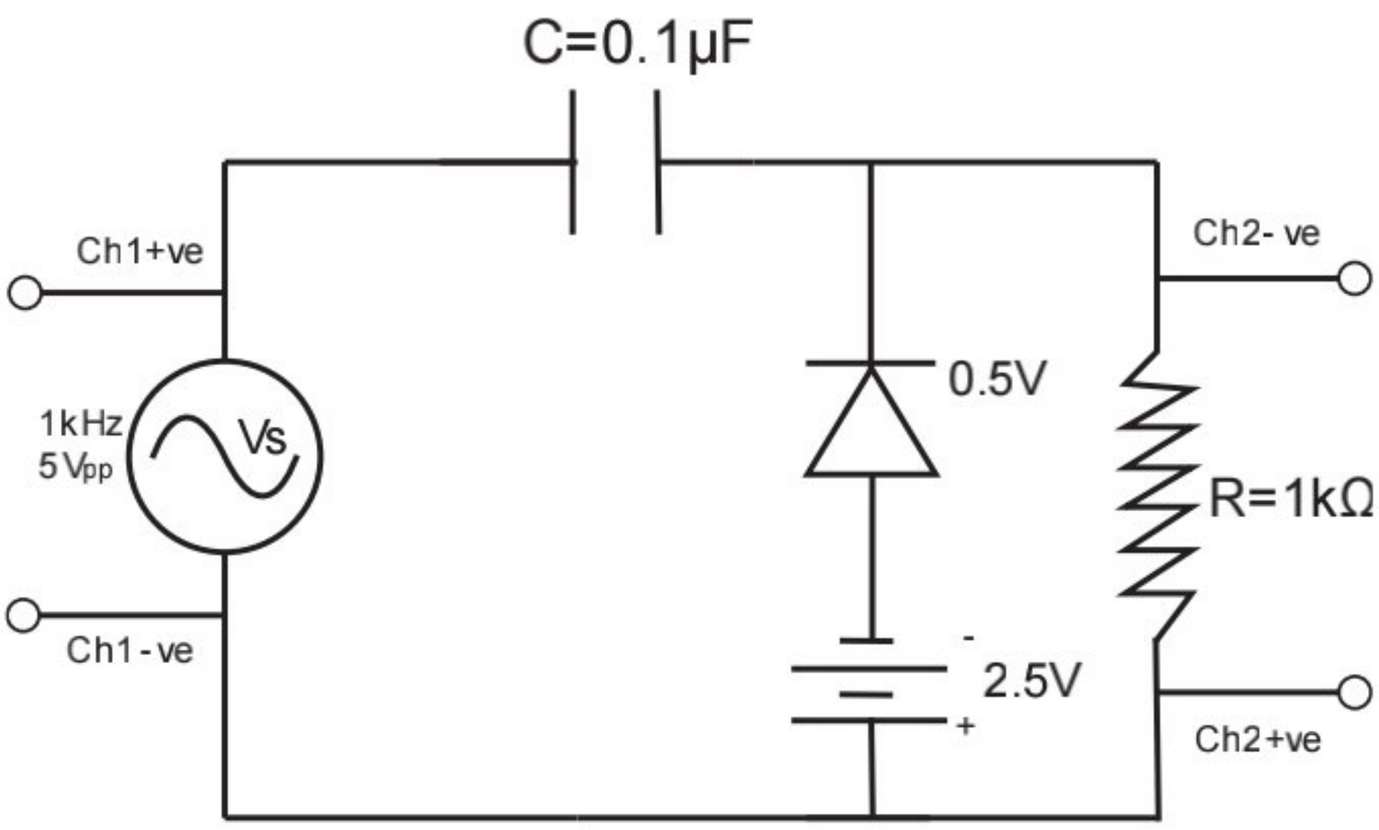

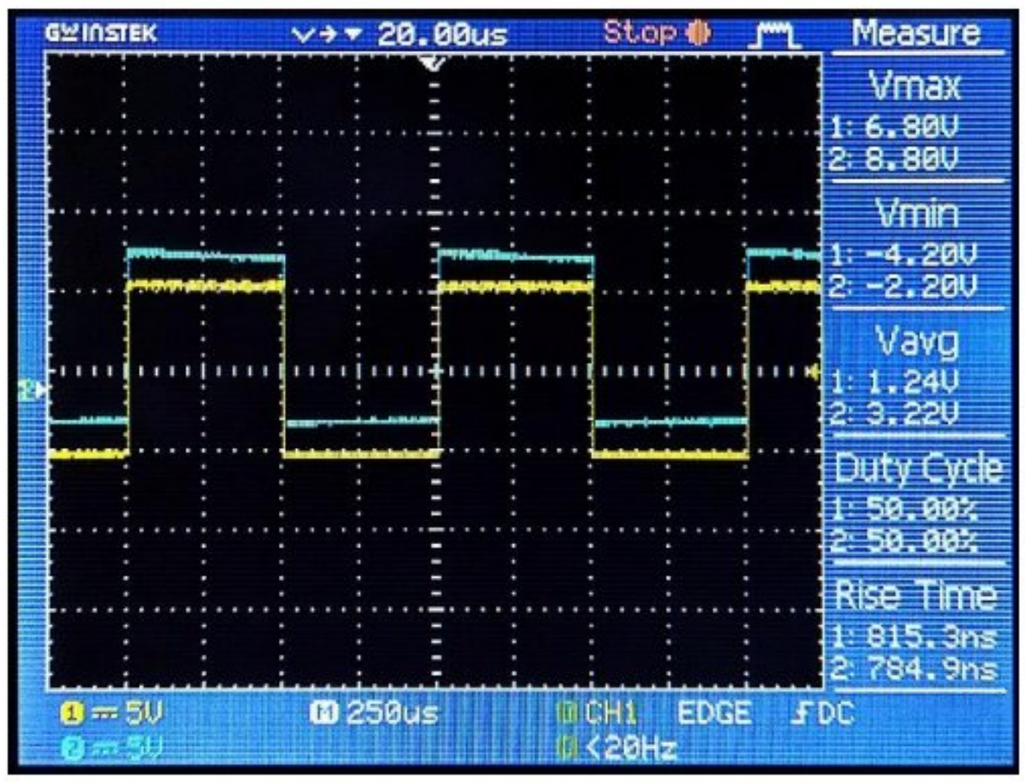

Fig 4.4: Biased Clamper Circuit-2 & Output Wave Shape (Upward Shift)

Discussion:

1. Calibrate the oscilloscope for accuracy.
2. Use perfect frequency, voltage & current
3. Be continuous with reverse voltage to prevent damage.
4. Measure voltage in parallel & when measuring current short the circuit.
5. Avoid overloading & short circuit
6. Follow guidelines & manual.